Tent China 10’ x 15’

TEMPLATE VERSION 1.0 - SCALE AT 50%

SAFE AREA

RIGHT AND LEFT PANEL

2X

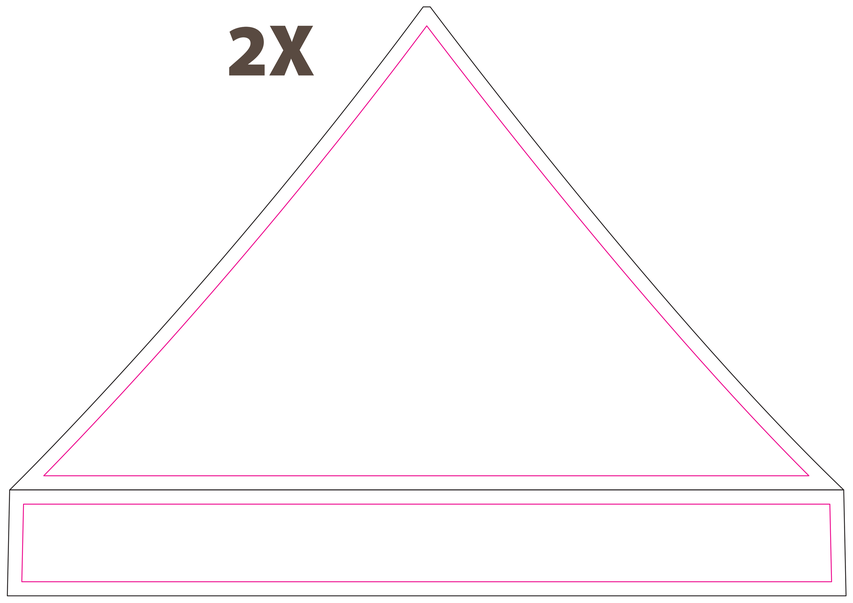

VALENCE - FRONT AND BACK

FRONT AND BACK

2X

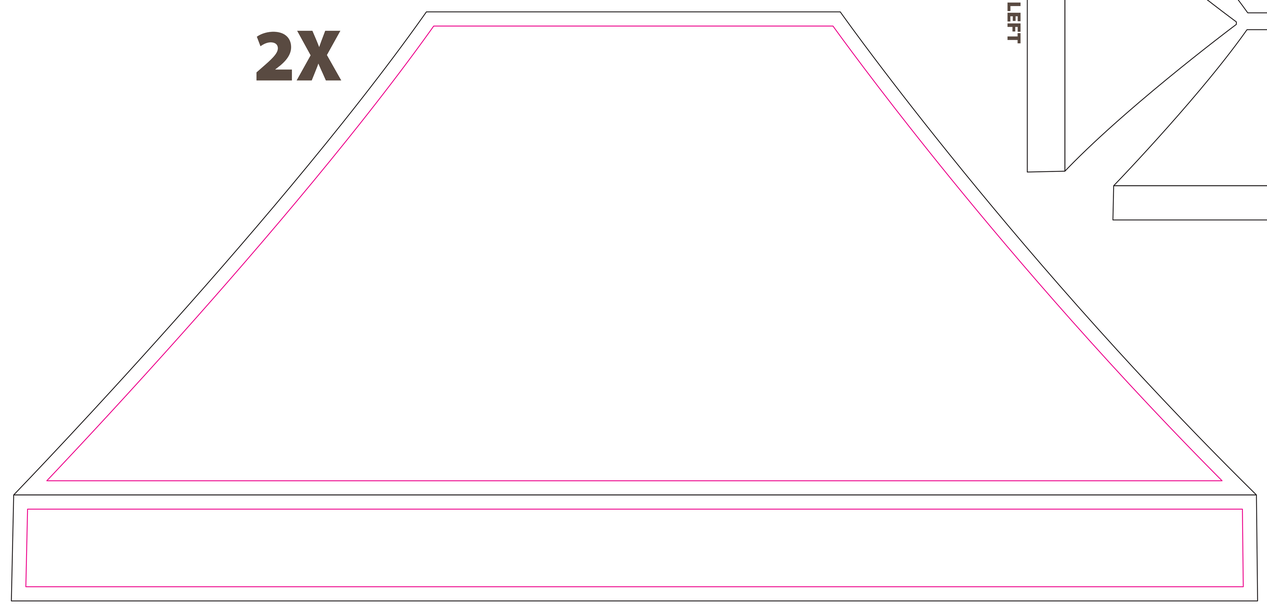

VALENCE - FRONT AND BACK

POSITIONING

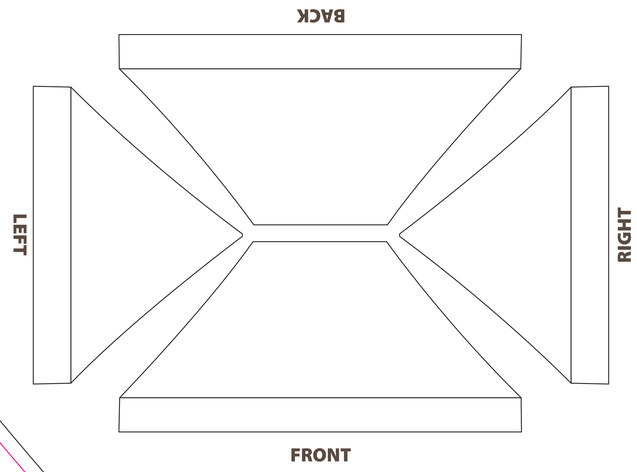

*POSSIBILITY OF MAKING A BACK WITH THE SAME TEMPLATE

RIGHT AND LEFT WALL

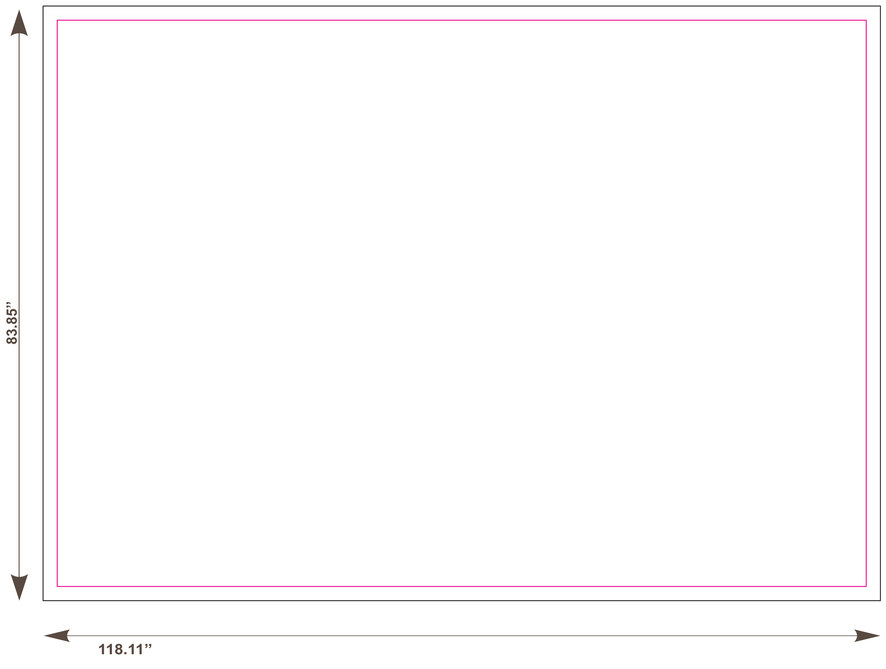

FRONT/BACK WALL

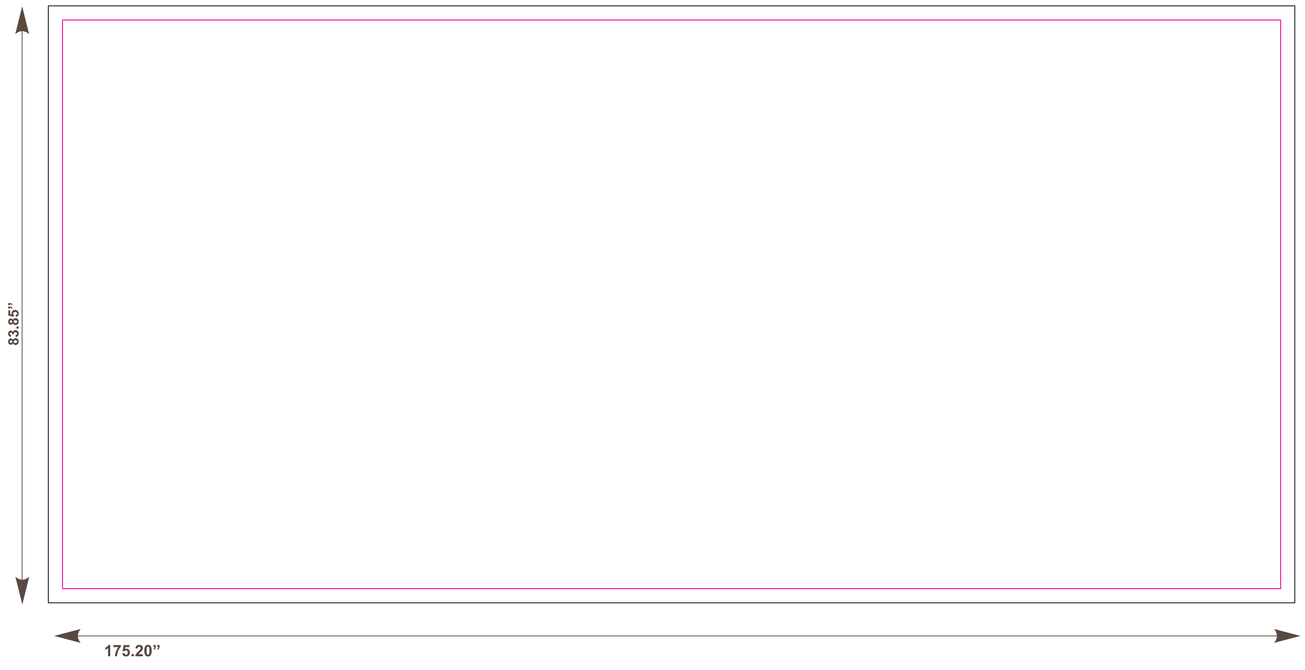
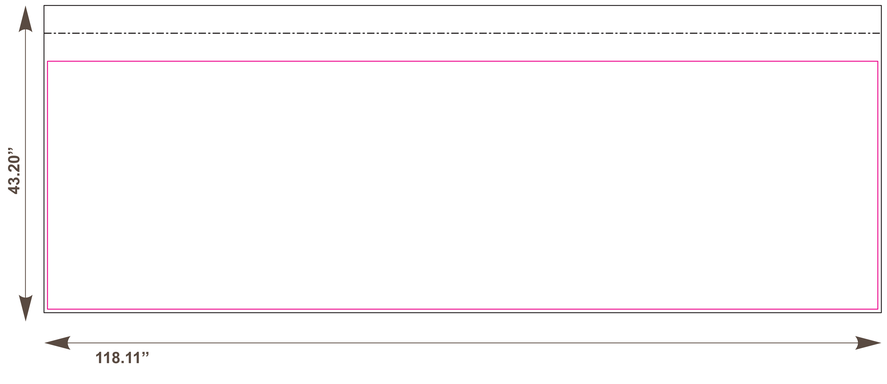
RIGHT AND LEFT HALF WALL